SYMBOLS		W.L.	GALLONS
AER	AERATION	8'-7"	12,130
ASH	AERATED SLUDGE HOLDING	8'-10"	1,518
CLAR	CLARIFIER	8"-7"	5,006
CCC	CHLORINE CONTACT CHAMBER	7'-0"	942

1. PARTITION, WATER TIGHT
2. BAFFLE, FLOW DIVERSION
3. FLOW PORT/PIPE
4. BLOWER ASSEMBLY
5. BLOWER CONTROL PANEL
6. AIR DIFFUSER
7. AIR BUBBLER
8. SLUDGE EDUCTOR ASSEMBLY
9. SLUDGE RETURN LINE
10. SLUDGE DRAW OFF LINE
11. SKIMMER
12. SKIMMER DISCHARGE PIPING
13. WEIR BOX/TROUGH ASSEMBLY
14. SCUM BAFFLE
15. WEIR DISCHARGE PIPING
16. MIXING TUBE
17. "V" NOTCH WEIR
18. SUPERNATANT RETURN
19. BARSCREEN
20. CHLORINATOR, TABLET TYPE
21. AIRLIFT DECANT, ADJUST
22. EMERGENCY OVER FLOW

GATE VALVE
CHECK VALVE
RELIEF VALVE
PRESSURE GAUGE
-A- AIR LINE
AIR CONTROL VALVE

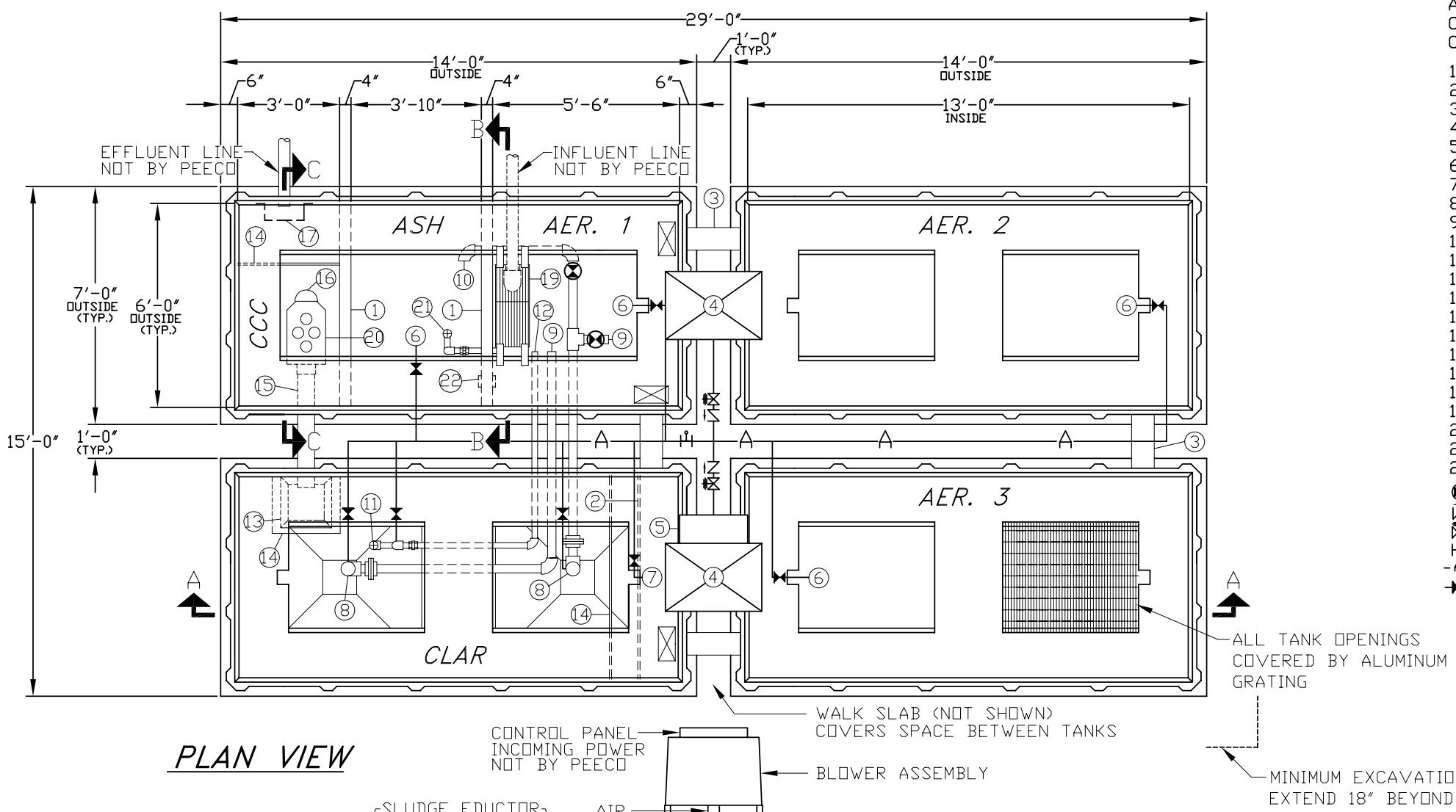

PLAN VIEW

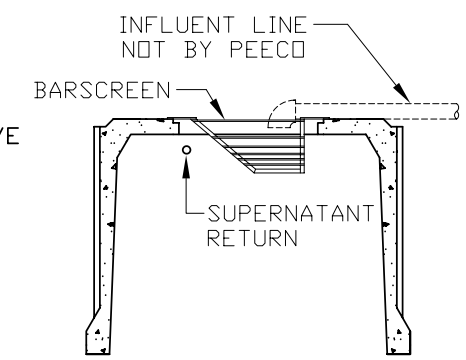

DETAIL "B"

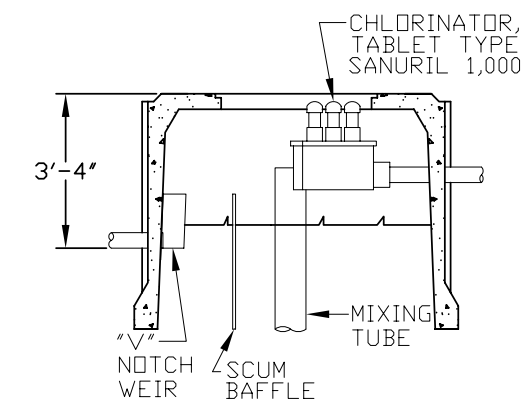

DETAIL "C"

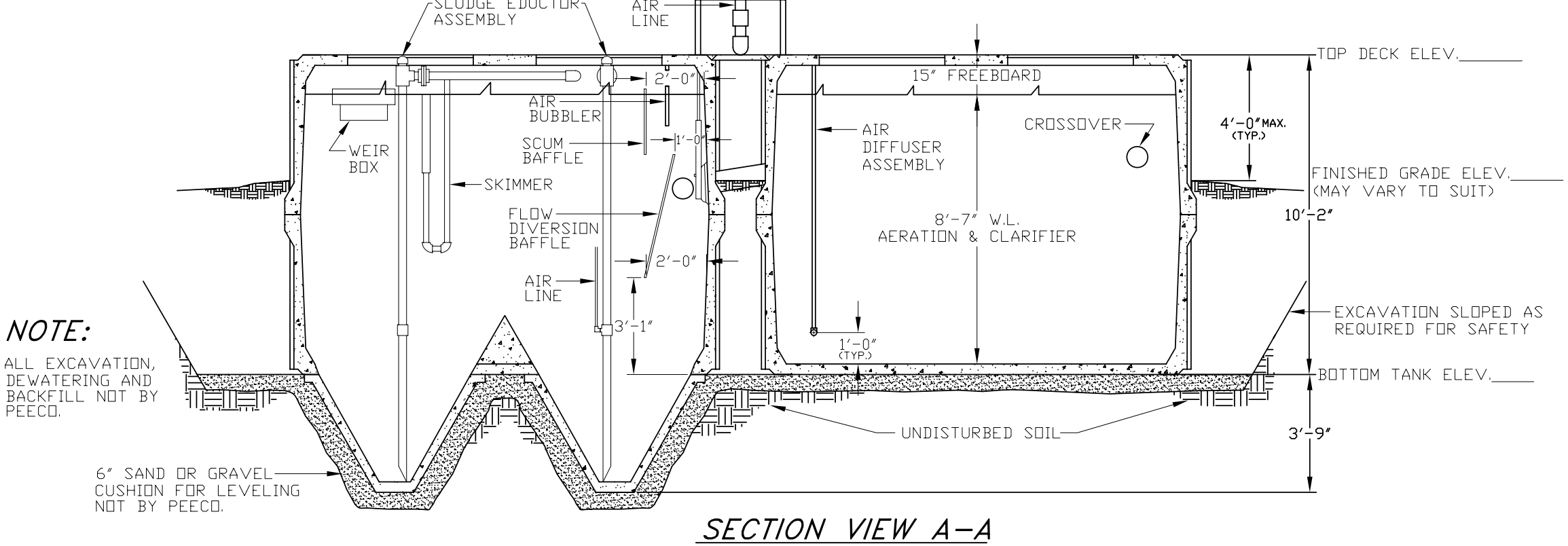

SECTION VIEW A-A

NOTE:

ALL EXCAVATION, DEWATERING AND BACKFILL NOT BY PEECO.

FLOW DIAGRAM

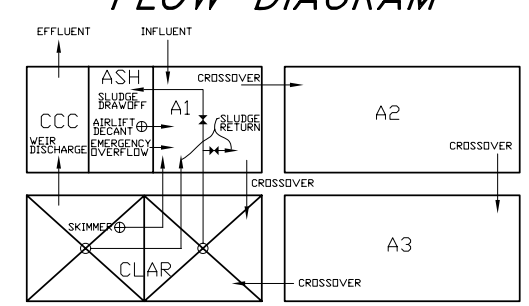

PROCESS ENGINEERED EQUIPMENT CO.
438 MCBRIDE LANE
P.O. BOX 1540
361-289-8891
CORPUS CHRISTI, TEXAS 78469

PEECO

NO	DATE	REVISION

PEECO DWG NO: 12-136
SCALE: 1/2"=1'-0"
DATE: 10/13/94
DWN BY: L.C.G.
APPROVED:

12,500 G.P.D. (TYP.)
EXTENDED AERATION PROCESS
WASTEWATER TREATMENT FACILITIES

SHEET