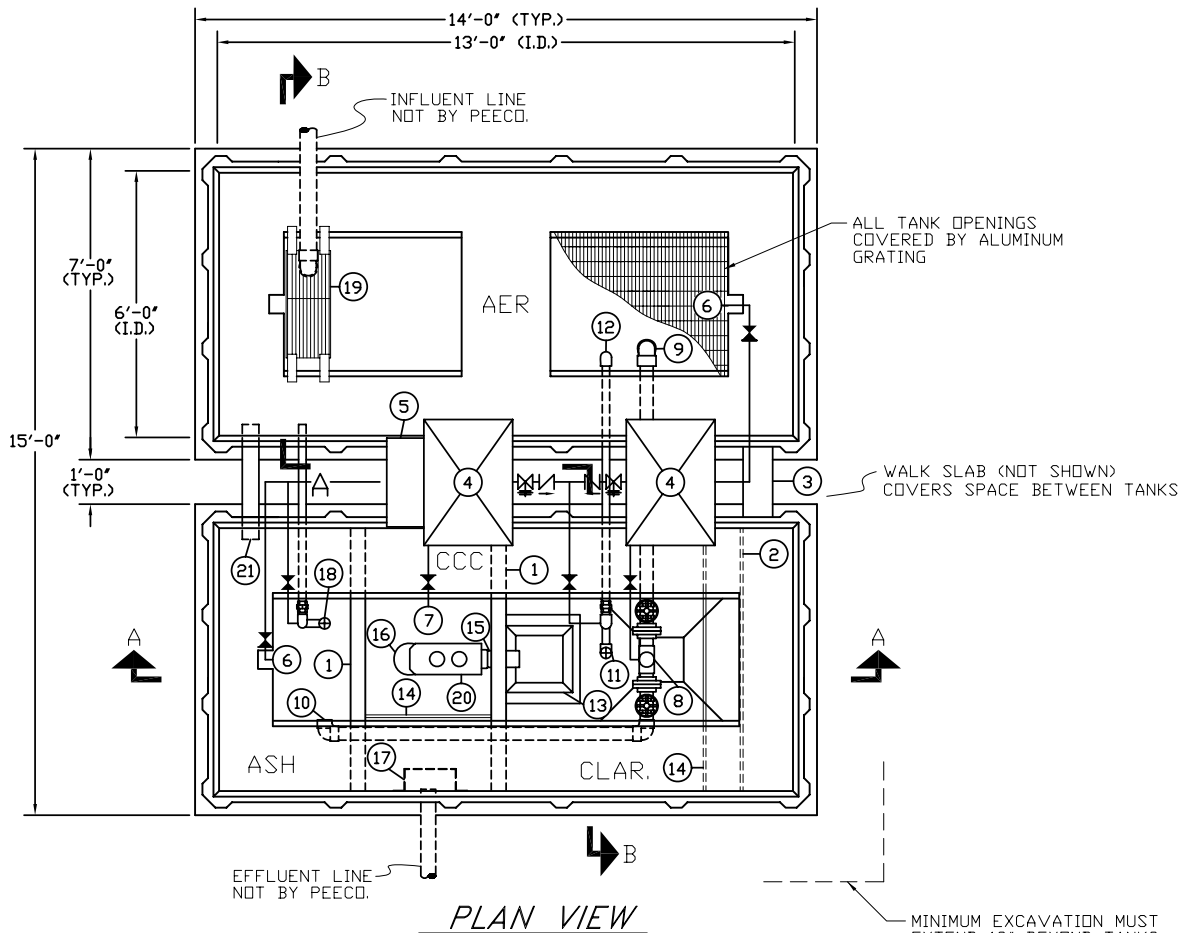

PLAN VIEW

SYMBOLS		W.L.	GALLONS
AER	AERATION	8'-7"	5,000
ASH	AERATED SLUDGE HOLDING	8'-10"	1,189
CLAR	CLARIFIER	8'-7"	2,504
CCC	CHLORINE CONTACT CHAMBER	7'-0"	890

1. PARTITION, WATER TIGHT
2. BAFFLE, FLOW DIVERSION
3. FLOW PORT/PIPE
4. BLOWER ASSEMBLY
5. BLOWER CONTROL PANEL
6. AIR DIFFUSER
7. AIR BUBBLER
8. SLUDGE EDUCTOR ASSEMBLY
9. SLUDGE RETURN LINE
10. SLUDGE DRAWOFF LINE
11. SKIMMER
12. SKIMMER DISCHARGE PIPING
13. WEIR BOX/TROUGH ASSEMBLY
14. SCUM BAFFLE
15. WEIR DISCHARGE PIPING
16. MIXING TUBE
17. "V" NOTCH WEIR
18. SUPERNATANT RETURN
19. BARSCREEN
20. CHLORINATOR, TABLET TYPE
21. EMERGENCY OVERFLOW

- GATE VALVE
- CHECK VALVE
- RELIEF VALVE
- PRESSURE GAUGE
- -A- AIR LINE
- AIR CONTROL VALVE

FLOW DIAGRAM

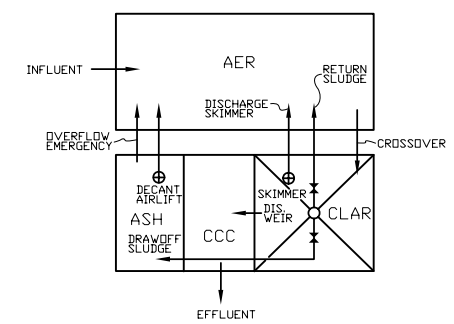

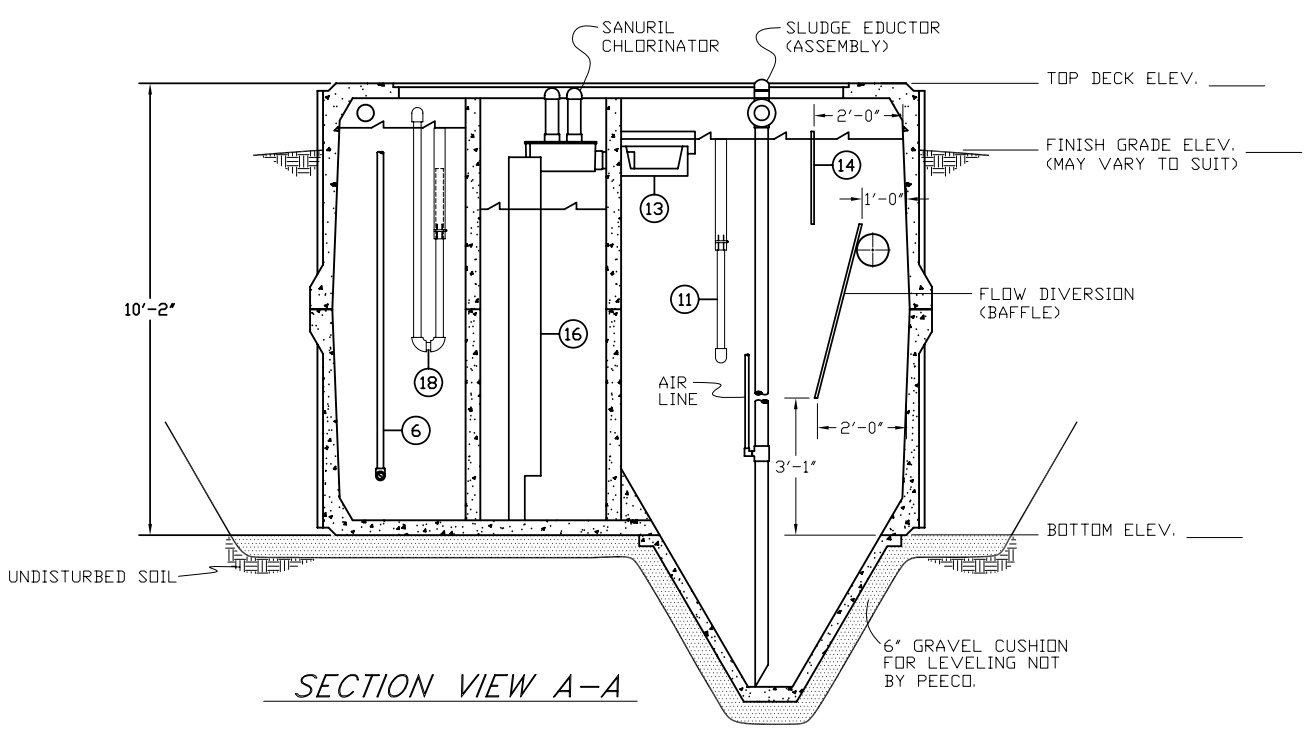

SECTION VIEW A-A

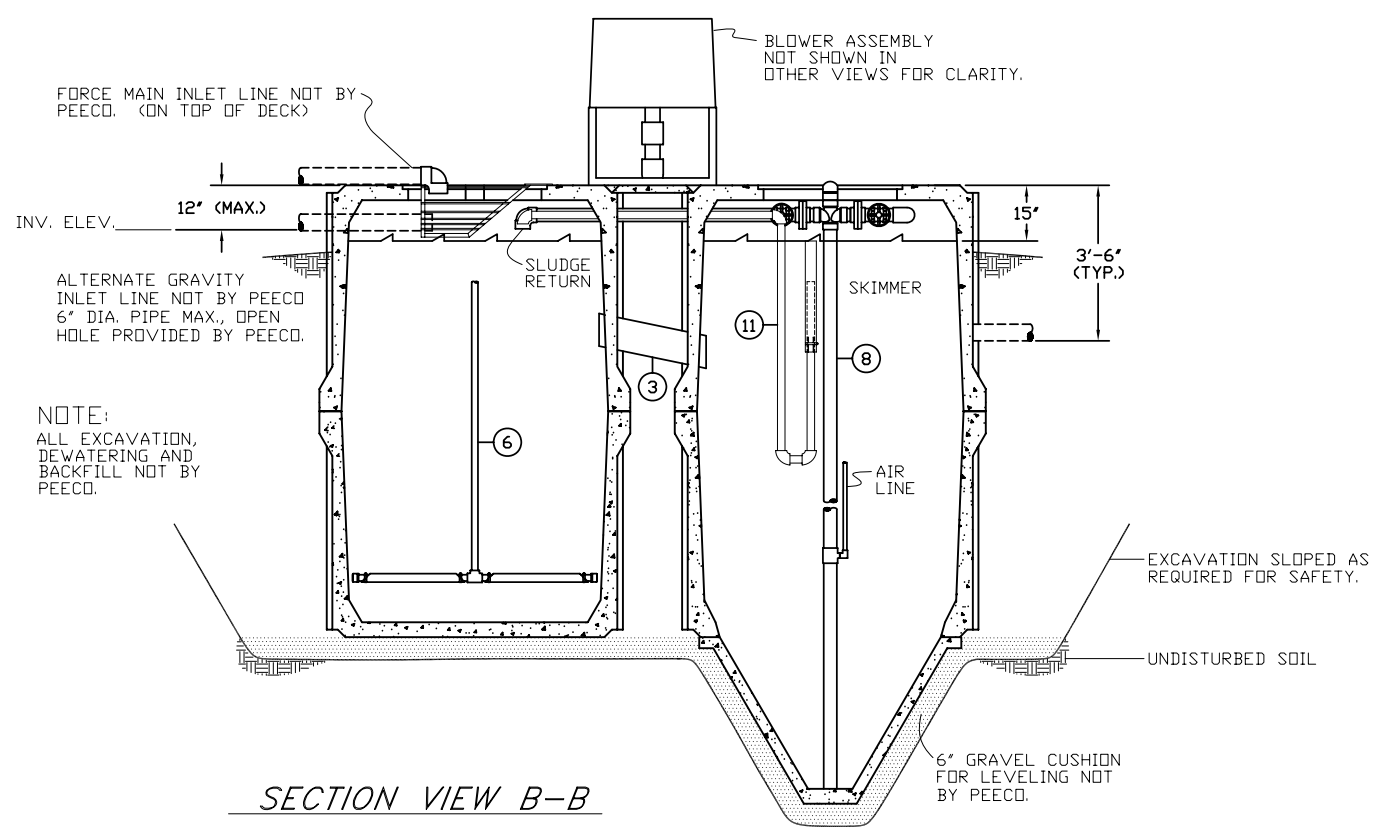

NOTE:
ALL EXCAVATION, DEWATERING AND BACKFILL NOT BY PEECO.

SECTION VIEW B-B

PROCESS ENGINEERED EQUIPMENT CO.
438 MCBRIDE LANE
P.O. BOX 9549
361-289-8891
Corpus Christi, Texas 78469

NO	DATE	REVISION

PEECO DWG NO: 12-128
SCALE: N.T.S.
DATE: 06/19/97
DWN BY: L.C.G.
APPROVED:

5,000 G.P.D. (TYP.)
WASTEWATER TREATMENT PLANT

SHEET